Principal Diagram Emulsion Breaking Bilge Water Cleaning System EBBWCS Mark III – CD

Data Sheet #: 31

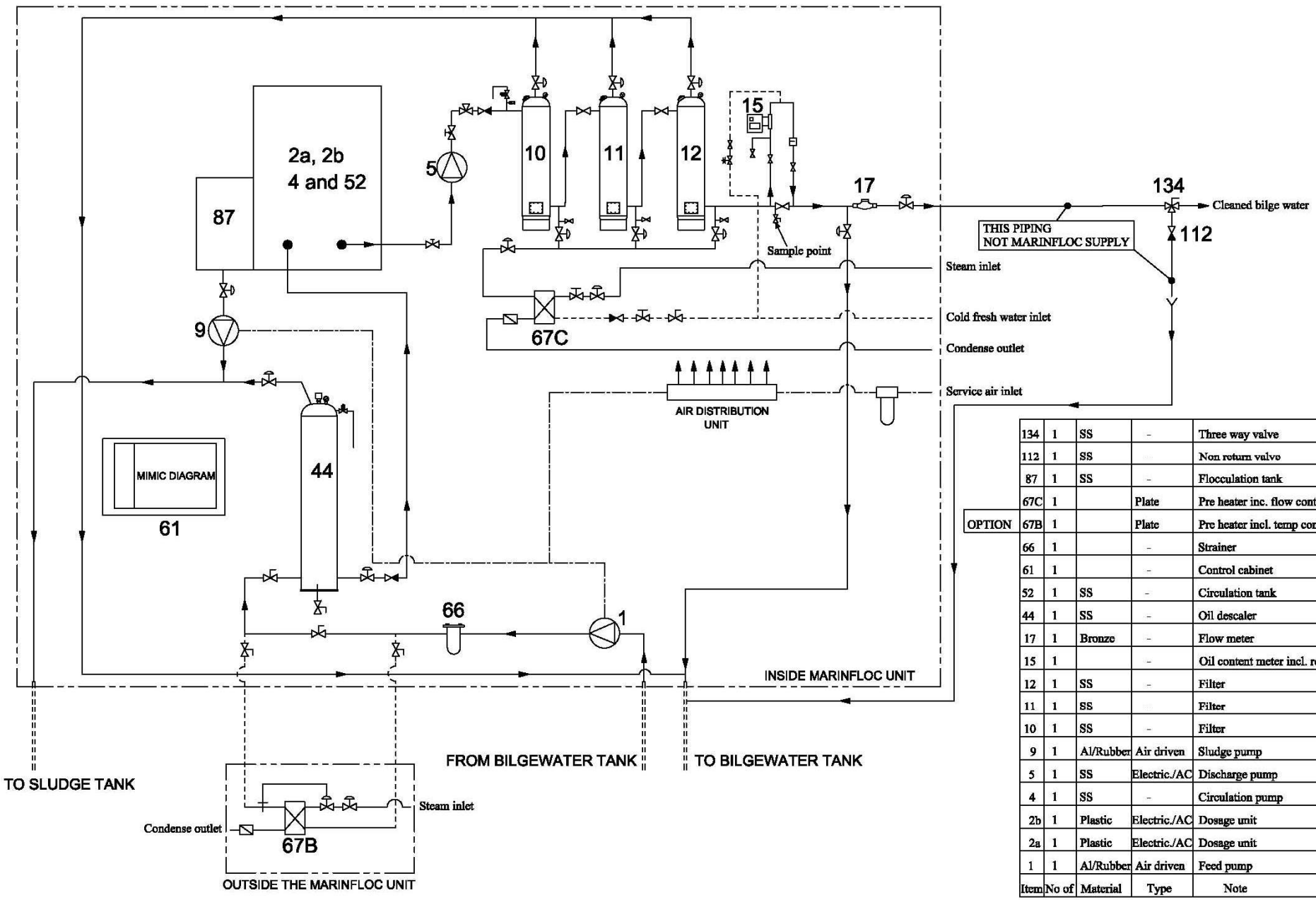

	Item	No of	Material	Type	Note
	134	1	SS	-	Three way valve
	112	1	SS		Non return valve
	87	1	SS	-	Flocculation tank
	67C	1		Plate	Pre heater inc. flow control valves.
OPTION	67B	1		Plate	Pre heater incl. temp control.
	66	1		-	Strainer
	61	1		-	Control cabinet
	52	1	SS	-	Circulation tank
	44	1	SS	-	Oil descaler
	17	1	Bronze	-	Flow meter
	15	1		-	Oil content meter incl. recorder
	12	1	SS	-	Filter
	11	1	SS		Filter
	10	1	SS	-	Filter
	9	1	Al/Rubber	Air driven	Sludge pump
	5	1	SS	Electric./AC	Discharge pump
	4	1	SS	-	Circulation pump
	2b	1	Plastic	Electric./AC	Dosage unit
	2a	1	Plastic	Electric./AC	Dosage unit
	1	1	Al/Rubber	Air driven	Feed pump